ALTERNATE SWING HANDLE

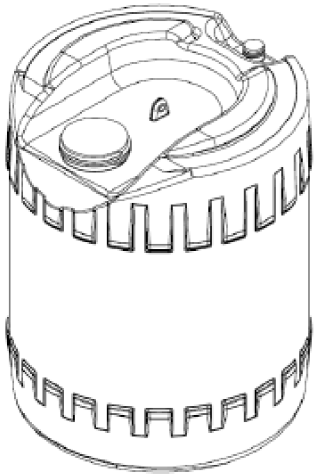

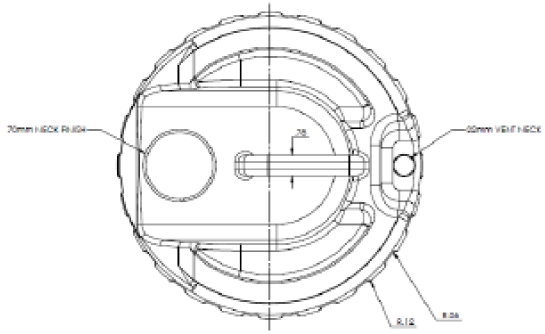

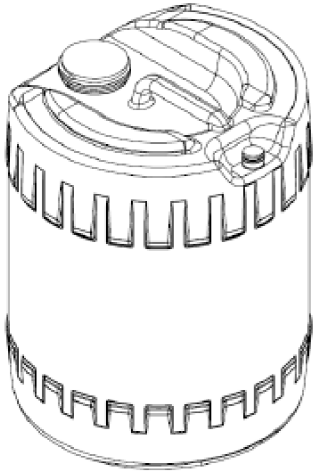

OFC TO TOP OF NECK: 19.628CC
PART WEIGHT: 1150g
MATERIAL: HDPE

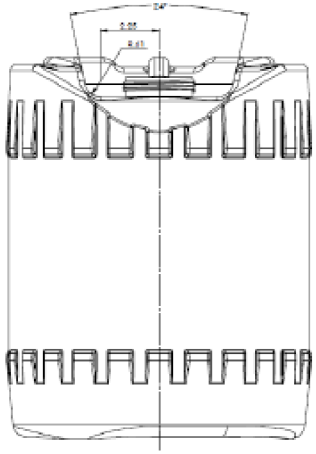

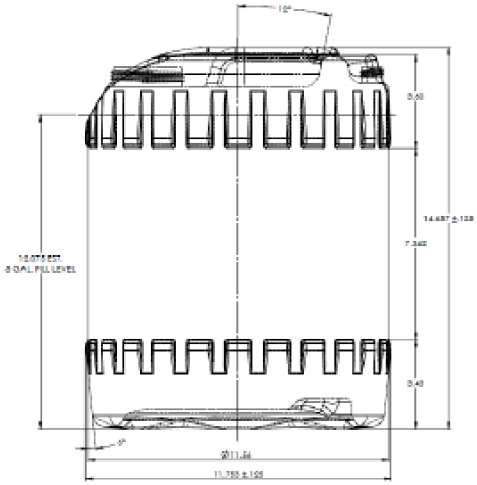

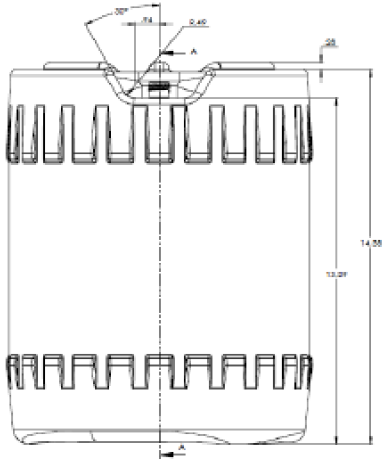

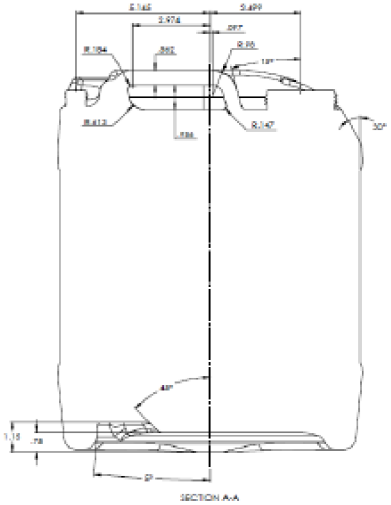

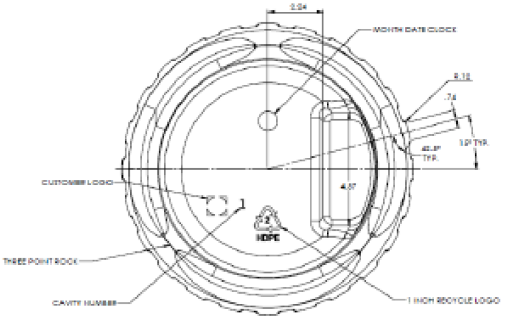

Pipeline Packaging
30310 Emerald Valley Pkwy
Glenwillow, OH 44139

PPC ITEM NUMBER: 81174	SKU: 01-05-079-00009	
DRAWN BY: -	CHECKED BY: -	DATE: 2/25/2019
DESCRIPTION: 5 Gal HDPE Tight Head Pail		COLOR: Natural
PART MATERIAL: -	VOLUME: -	WEIGHT: -
DWG NO.: -	DWG SIZE: A	SHEET NO: 1 of 1 / REV: -

PROPRIETARY AND CONFIDENTIAL

THE INFORMATION CONTAINED IN THIS DRAWING IS THE SOLE PROPERTY OF PIPELINE PACKAGING. ANY REPRODUCTION IN PART OR AS A WHOLE WITHOUT THE WRITTEN PERMISSION OF PIPELINE PACKAGING IS PROHIBITED.

UNLESS OTHERWISE SPECIFIED:

UNITS OF MEASURE: Inches

TOLERANCES: Specified in drawing