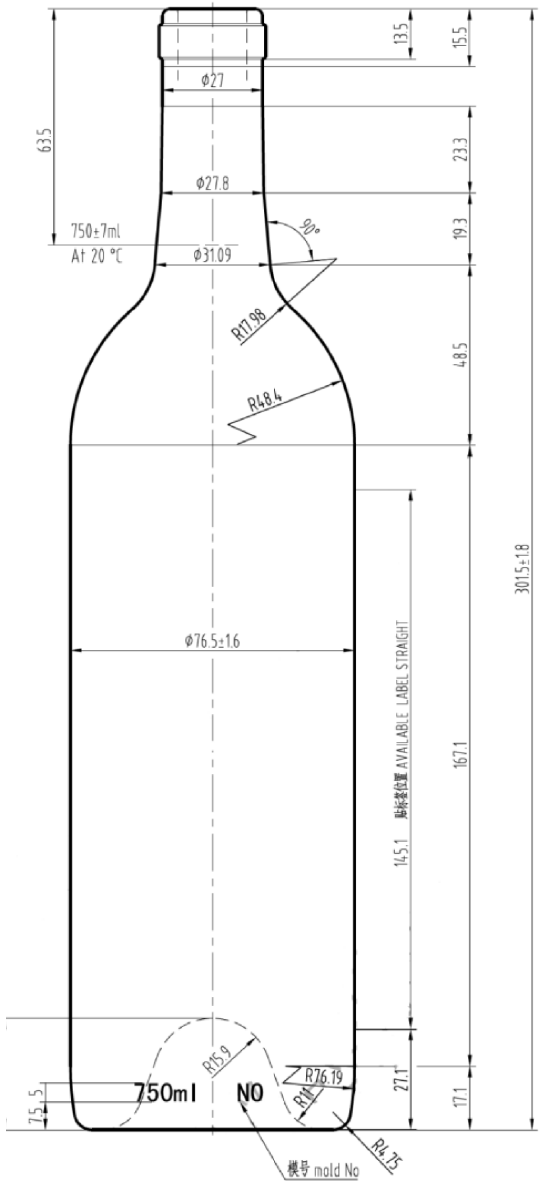

后视图 back view

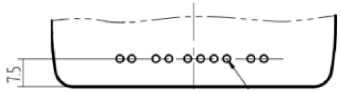

瓶口尺寸 FINISH(S 2/1)

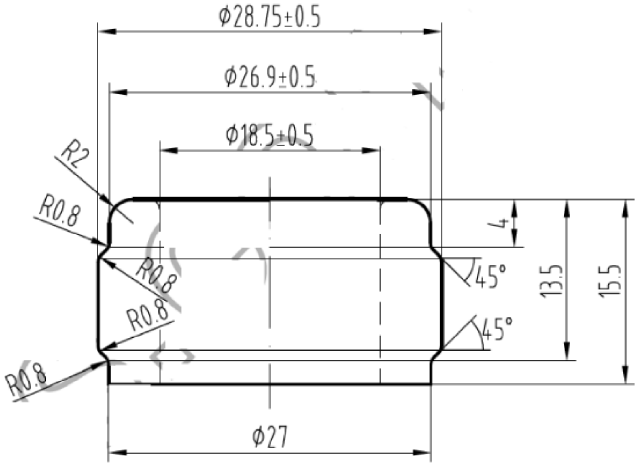

底视图 BOTTOM VIEW

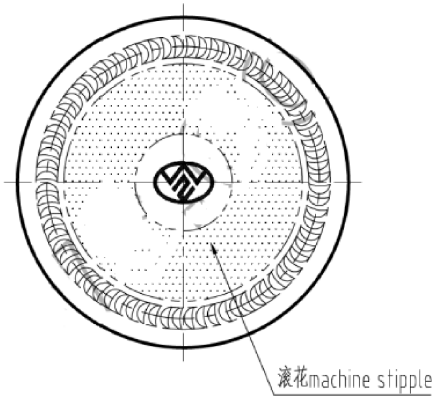

Pipeline Packaging
30310 Emerald Valley Pkwy
Glenwillow, OH 44139

PPC ITEM NUMBER: 61022	SKU: 04-04-010-00005	
DRAWN BY: -	CHECKED BY: -	DATE: 11/11/2019
DESCRIPTION: 750ml Antique Cork Bar Top		COLOR: Green
PART MATERIAL: Glass	VOLUME: 750 ml	WEIGHT: 550±25 gms
DWG NO.: -	DWG SIZE: A	SHEET NO: 1 of 1 / REV: -

PROPRIETARY AND CONFIDENTIAL

THE INFORMATION CONTAINED IN THIS DRAWING IS THE SOLE PROPERTY OF PIPELINE PACKAGING. ANY REPRODUCTION IN PART OR AS A WHOLE WITHOUT THE WRITTEN PERMISSION OF PIPELINE PACKAGING IS PROHIBITED.

UNLESS OTHERWISE SPECIFIED:

UNITS OF MEASURE: Millimeters

TOLERANCES: Specified in drawing