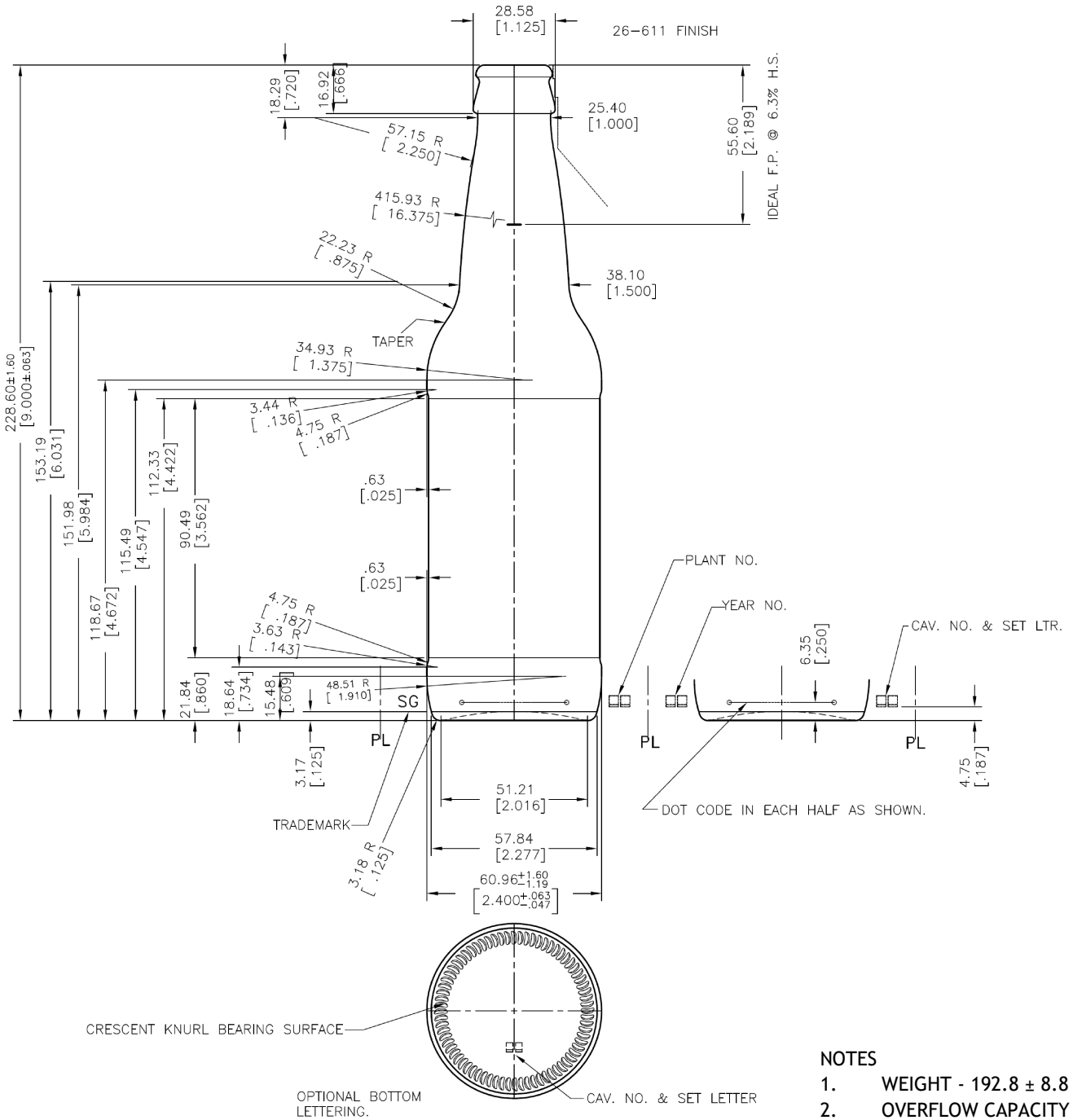

NOTES

1. WEIGHT - 192.8 ± 8.8 gms
2. OVERFLOW CAPACITY - 377.35 ml

DISCLAIMER THIS INFORMATION IS PROVIDED AS A GENERAL GUIDE, INCLUDING DIMENSIONS. IT IS THE CUSTOMER'S RESPONSIBILITIES TO SELECT THE PROPER CONTAINER FOR PRODUCT AND APPLICATION COMPATIBILITY.	DISTRIBUTED BY: Pipeline Packaging	REF NO.: DWG10291
	DESCRIPTION: 12 oz Glass Long Neck Beer	