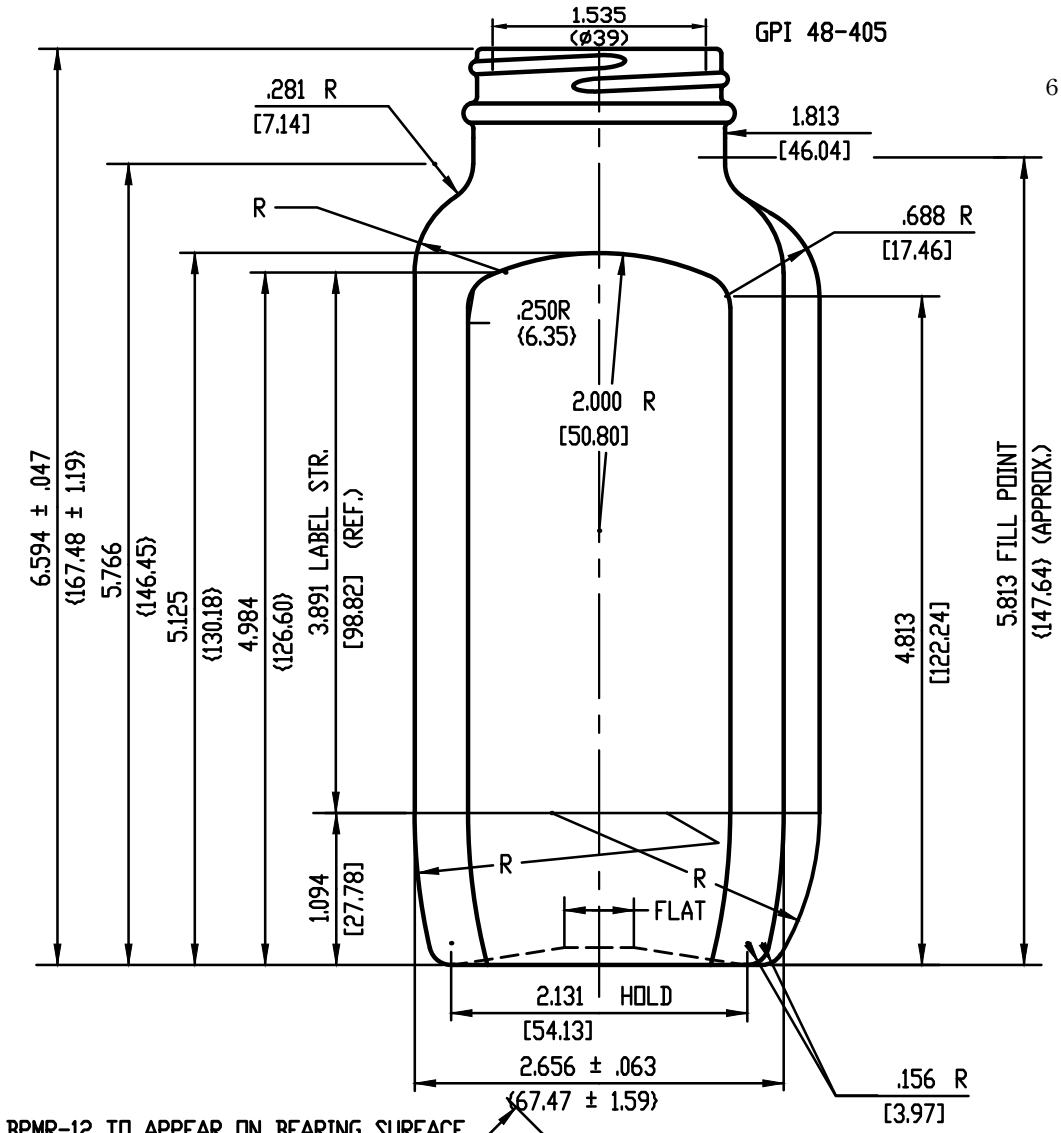

BPMR-12 TO APPEAR ON BEARING SURFACE.

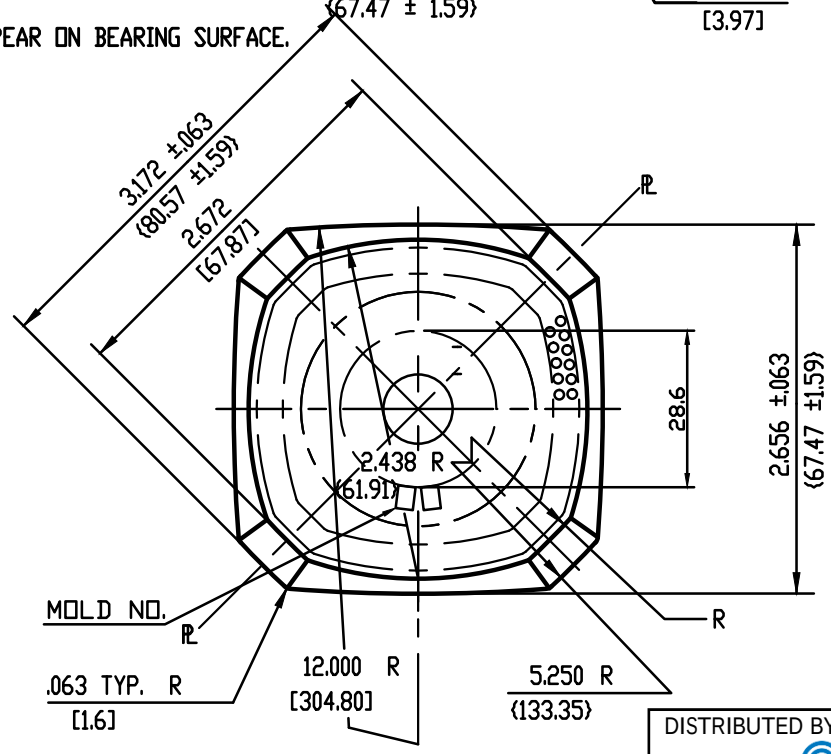

T=2.81mm

SPECIFICATIONS	
WEIGHT	290.58 ±14.17 g 10.25 ±0.5 oz.
NET CAP	ml
O.FLOW CAP	504.23 ±7.39 ml 17.05 ±0.25 FL. OZ.

DISTRIBUTED BY: Pipeline Packaging

REF NO.: DWG31850

DISCLAIMER

THIS INFORMATION IS PROVIDED AS A GENERAL GUIDE, INCLUDING DIMENSIONS. IT IS THE CUSTOMER'S RESPONSIBILITY TO SELECT THE PROPER CONTAINER FOR PRODUCT AND APPLICATION COMPATIBILITY.

DESCRIPTION:

16 oz Glass Wide Mouth French Square Bottle, 48-400