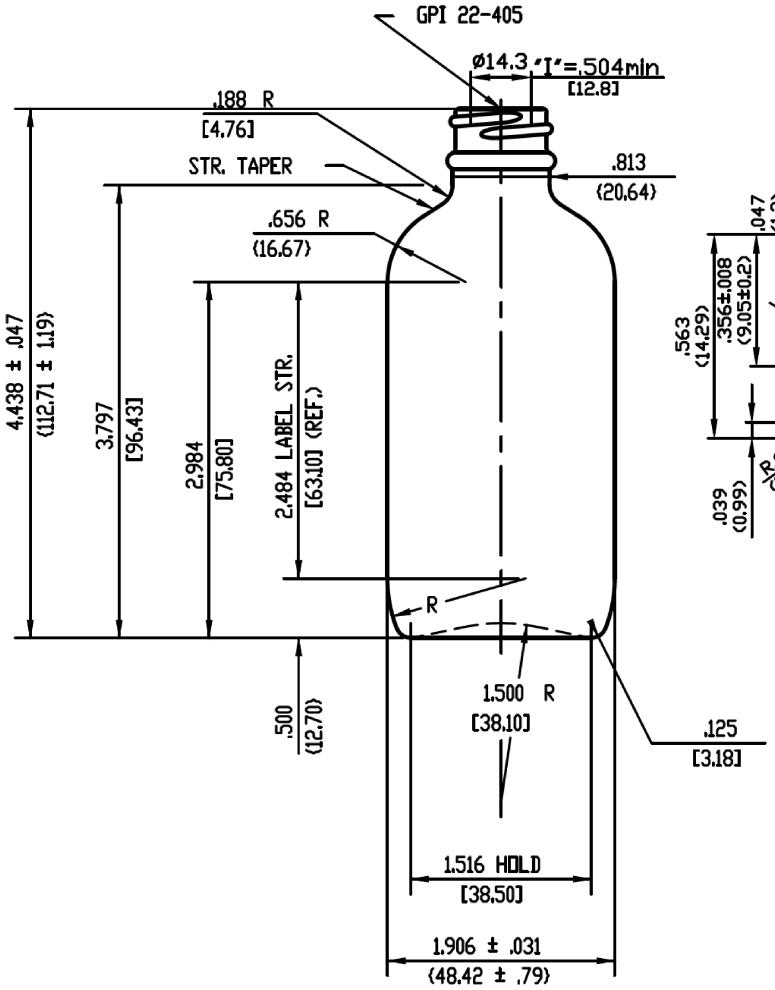

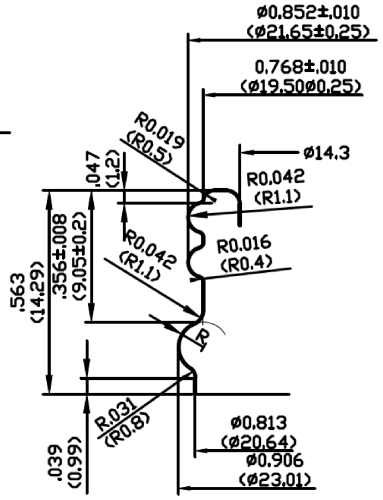

S=3:1
PITCH=3.2mm
WIDTH=2.2mm
TURN=1

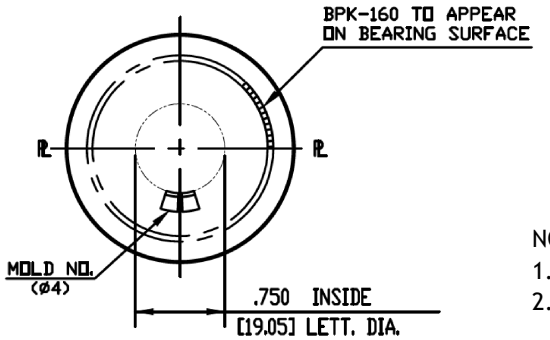

NOTES
1. WEIGHT - 92 ± 5 grams
2. OVERFLOW CAPACITY - 4.328 ± .094 oz

DISCLAIMER

THIS INFORMATION IS PROVIDED AS A GENERAL GUIDE, INCLUDING DIMENSIONS. IT IS THE CUSTOMER'S RESPONSIBILITIES TO SELECT THE PROPER CONTAINER FOR PRODUCT AND APPLICATION COMPATIBILITY.

DISTRIBUTED BY: Pipeline Packaging

REF NO.: DWG10385

DESCRIPTION: 4 oz Boston Round, 22-400