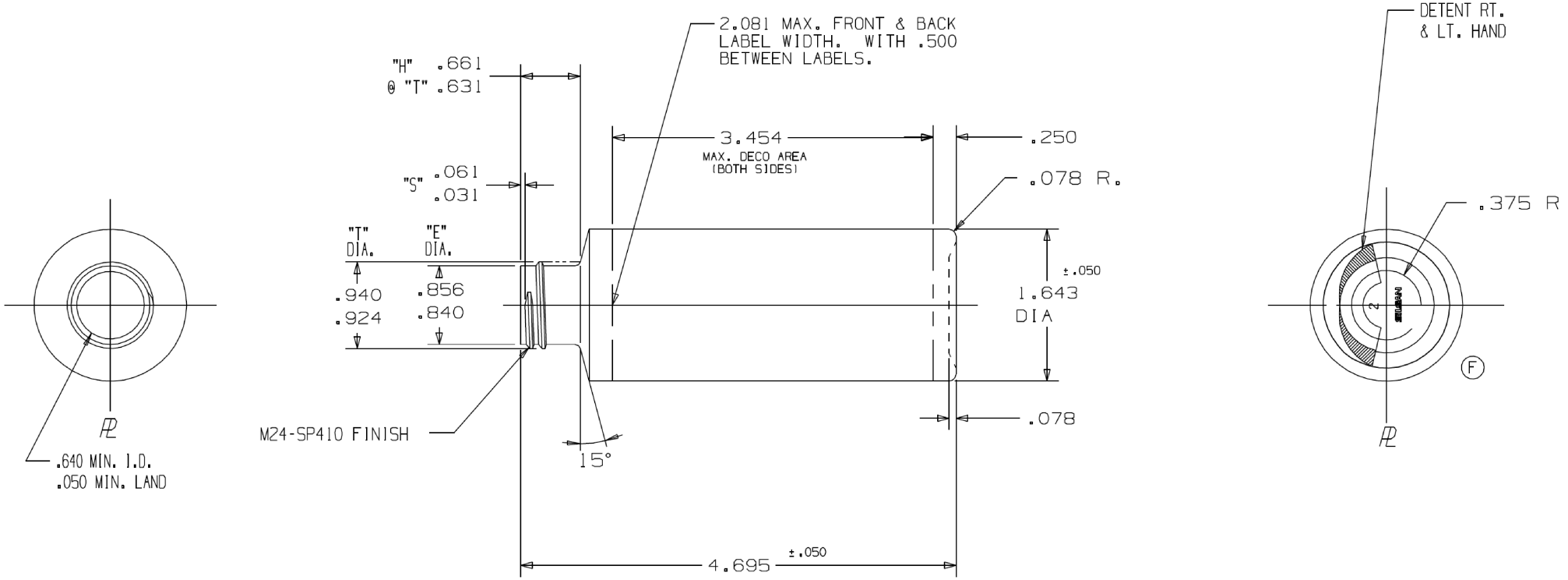

NOTES :

1) OVERFLOW CAPACITY : 4.44 ± .17 FL.OZ.
(131.3 ± 5.0 CC'S.)

2) WEIGHT : 12.0 ± 1.0 GRAMS

DISCLAIMER	DISTRIBUTED BY: Pipeline Packaging	REF NO.: DWG10261
THIS INFORMATION IS PROVIDED AS A GENERAL GUIDE, INCLUDING DIMENSIONS. IT IS THE CUSTOMER'S RESPONSIBILITIES TO SELECT THE PROPER CONTAINER FOR PRODUCT AND APPLICATION COMPATIBILITY.	DESCRIPTION: 4 oz HDPE Cylinder Styleline, 24-410	