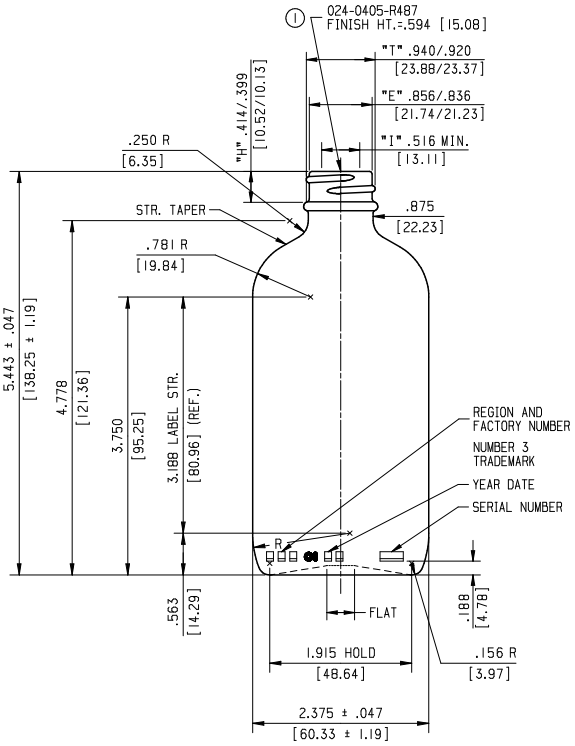

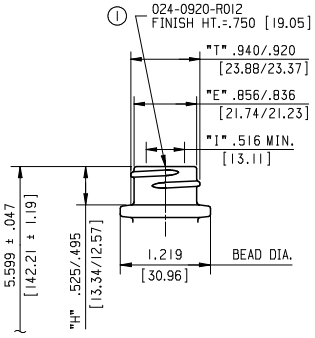

1. THESE FINISH DIMENSIONS ARE BASED ON THE CURRENT FINISH SPECIFICATIONS AS OF THE ISSUE DATE OF THIS DRAWING.

C.I.D. III DOTS AND CAVITY NUMBER TO APPEAR ON HEEL. CAVITY NUMBER TO BE .125 [3.18] TALL.

HEEL LETTERING TO APPEAR ON SIDE OPPOSITE C.I.D. III DOTS, AND TO BE .125 [3.18] TALL.

OPTIONAL:
BOTTOM PLATE LETTERING TO BE .188 [4.76] TALL, WITH BAR BELOW LETTERING.

OPTIONAL:
C.I.D. RINGS TO APPEAR ON BOTTOM.

BPK-150 TO APPEAR ON BEARING SURFACE.

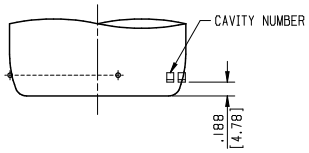

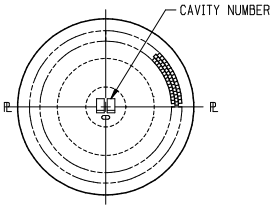

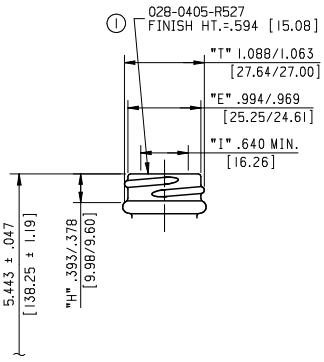

FINISH	OVERFLOW CAPACITY	WEIGHT
024-0405-R487	8.500fl.oz. ± 0.156fl.oz. [251.38ml ± 4.62ml]	5.875oz. ± 0.250oz. [166.55g ± 7.09g]
024-0920-R012	8.530fl.oz. ± 0.156fl.oz. [252.26ml ± 4.62ml]	6.000oz. ± 0.250oz. [170.10g ± 7.09g]
028-0405-R527	8.540fl.oz. ± 0.156fl.oz. [252.56ml ± 4.62ml]	5.938oz. ± 0.250oz. [168.33g ± 7.09g]

DISTRIBUTED BY:

Pipeline Packaging

REF NO.:

DWG30528

DESCRIPTION:

8 oz Flint Boston Round, 24-400

DISCLAIMER

THIS INFORMATION IS PROVIDED AS A GENERAL GUIDE, INCLUDING DIMENSIONS. IT IS THE CUSTOMER'S RESPONSIBILITIES TO SELECT THE PROPER CONTAINER FOR PRODUCT AND APPLICATION COMPATIBILITY.