# 12–Liter Round Container with Lo-Vis EZ Cover®

**Multiple Uses**
Dry Products
Liquid Products

**Product Codes**
Container: **C127**
Description: 12.0 L / 3.2-gallon round can

Cover: **LTGZ**
Description: Tamper-evident, Lo-Vis EZ Cover® with four tabs and tubular gasket

**Features**
Gauge: 70 mil.
Nominal capacity: 12.0 L / 3.2 USG
Stack performance: 350 lbs.*
Tare weights: Body: 1.22 lbs. / .56 kgs
Cover: .58 lbs. / .26 kgs.
*Note: *Ratings will be reduced with uneven load distribution.*

**Specifications with Cover**
Dimensions: 12-3/8" D X 9-9/16"H
Maximum capacity: 12.9 L / 3.4 USG
Tare weight: 1.80 lbs. / .82 kgs.

**Colors**
Standard: White, Black and Natural
Custom: Available at manufacturer's discretion

**Decorating Options**
Four or six* color offset printing
Print area: 34-1/16"W x 5-1/2"H
*Note: *Where available*

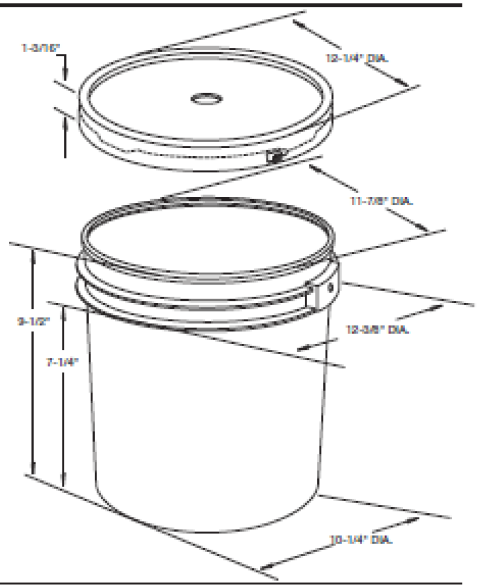


| **Shipping Data** | **Bodies** | **Covers** | **Filled Containers** |
|---|---|---|---|
| Qty. per pallet/carton: | 180 | 1,152 (24 boxes of 48)* | 48 (12 per layer / 4 layers high) |
| Gross Weight (lbs/kgs.)**: | 219.6/100.8 | 668.2/299.5 | Pallet Height: 46.8" |
| Den. (lbs./C.F./kgs./m3): | 4.8/77.2 | 5.5/86.6 | |
| Length (in./cm.): | 49/124.5 | 52/132.1 | |
| Width (in./cm.): | 38.5/97.8 | 40/101.6 | |
| Height (in./cm.): | 42.2/107.2 | 101.5/257.8 | |

Estimated truckload quantity of 7,560 bodies and covers***

*Notes: *Bulk pack also available*
***Weight does not include pallet/packaging*
****Truckload quantity based on 53' trailer*

**Materials**
FDA approved materials
Resin: Body: High-Density Polyethylene (HDPE)
Cover: High-Density Polyethylene (HDPE)
Styrene Butadiene Rubber Gasket
MSDS Sheets available upon request

**Optional Carrying Handle**

**DISCLAIMER**

THIS INFORMATION IS PROVIDED AS A GENERAL GUIDE, INCLUDING DIMENSIONS. IT IS THE CUSTOMER'S RESPONSIBILITIES TO SELECT THE PROPER CONTAINER FOR PRODUCT AND APPLICATION COMPATIBILITY.

DISTRIBUTED BY: Pipeline Packaging

DWG NO.: DWG10158

DESCRIPTION: 12 liter HDPE Open Head Pail