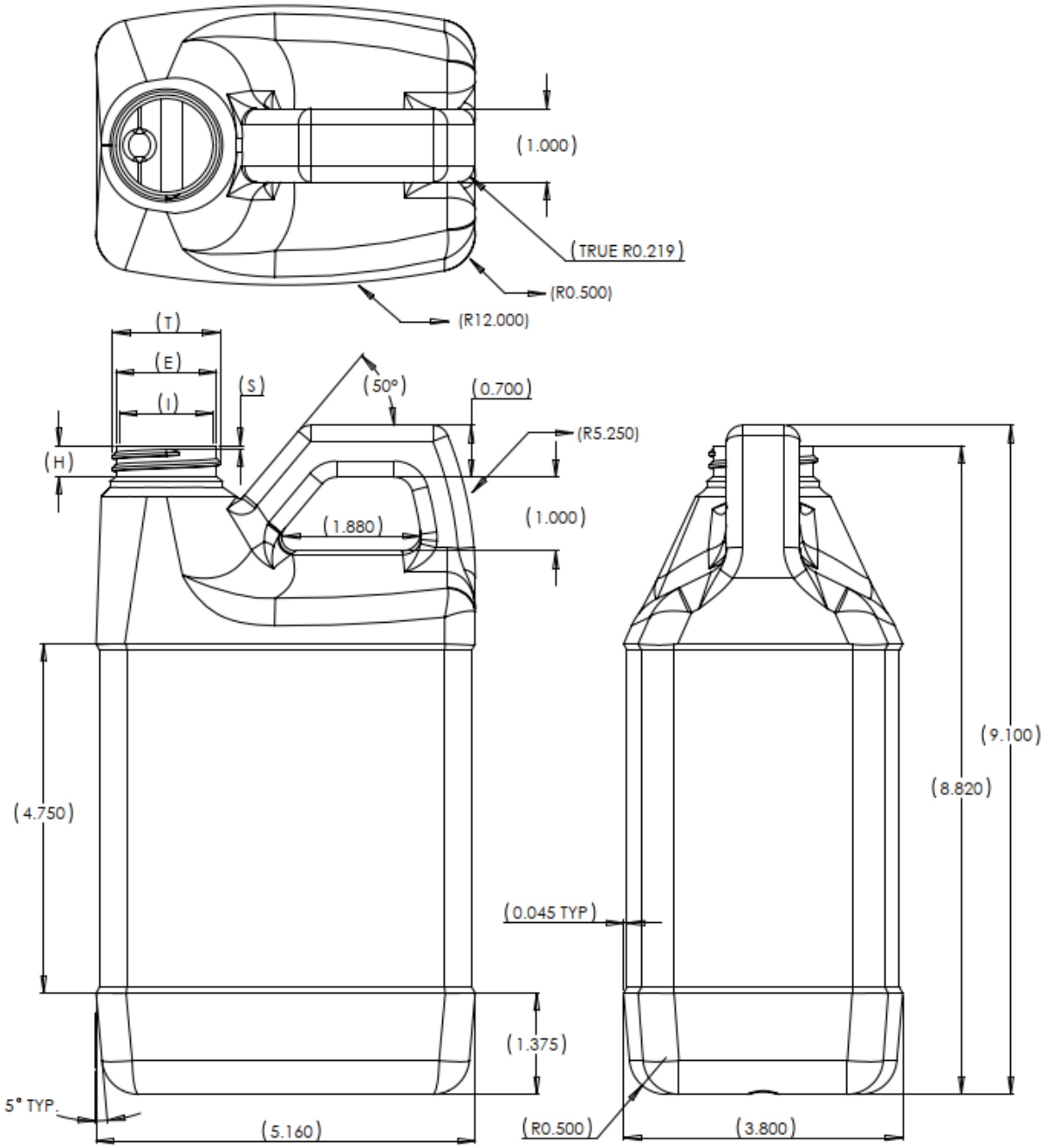

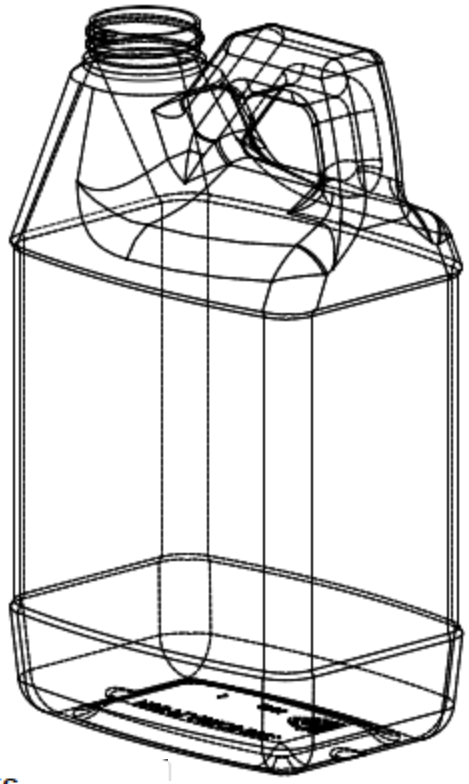

NOTES

MEASURE "H" DIM (.435/.405)
AT BASE OF "E" DIM.

38-400 CR NECK FINISH		
SYM.	MAX.	MIN.
T	1.476	1.452
E	1.382	1.358
H	0.435	0.405
S	0.061	0.031
I	0.000	0.987
L	0.000	0.000

DISCLAIMER

THIS INFORMATION IS PROVIDED AS A GENERAL GUIDE, INCLUDING DIMENSIONS. IT IS THE CUSTOMER'S RESPONSIBILITIES TO SELECT THE PROPER CONTAINER FOR PRODUCT AND APPLICATION COMPATIBILITY.

DISTRIBUTED BY: Pipeline Packaging

REF NO.: DWG30247

DESCRIPTION: 64 oz White HDPE F-Style 38-400