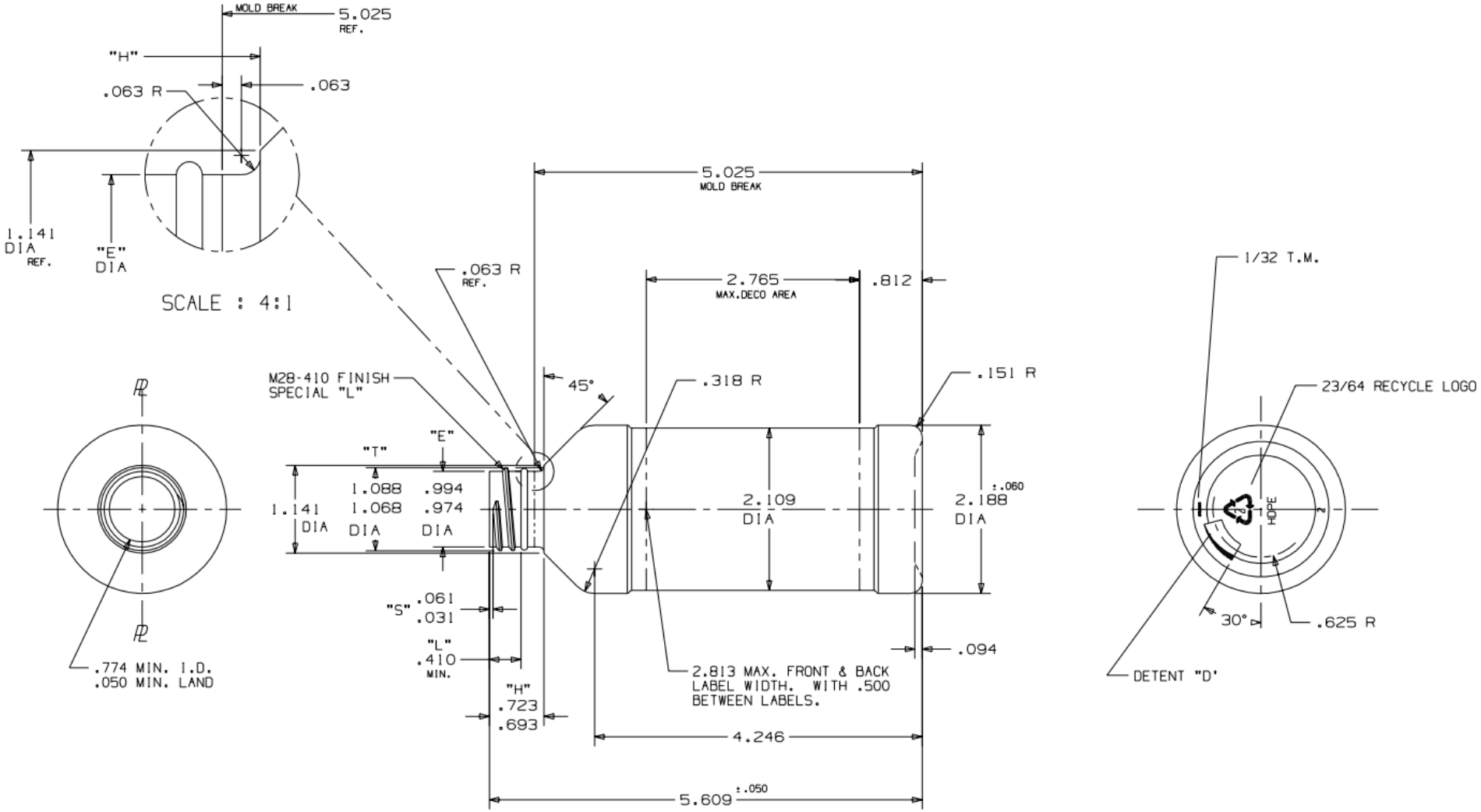

NOTES :

1) OVERFLOW CAPACITY : 8.94 ± .24 FL.OZ. (264.5 ± 7.0 CC'S.)

2) WEIGHT : 17.0 ± 1.0 GRAMS

DISCLAIMER THIS INFORMATION IS PROVIDED AS A GENERAL GUIDE, INCLUDING DIMENSIONS. IT IS THE CUSTOMER'S RESPONSIBILITIES TO SELECT THE PROPER CONTAINER FOR PRODUCT AND APPLICATION COMPATIBILITY.	DISTRIBUTED BY: Pipeline Packaging	REF NO.: DWG30744
	DESCRIPTION: 8 oz Natural HDPE Modern-Round, 28-410, 17 Gram	