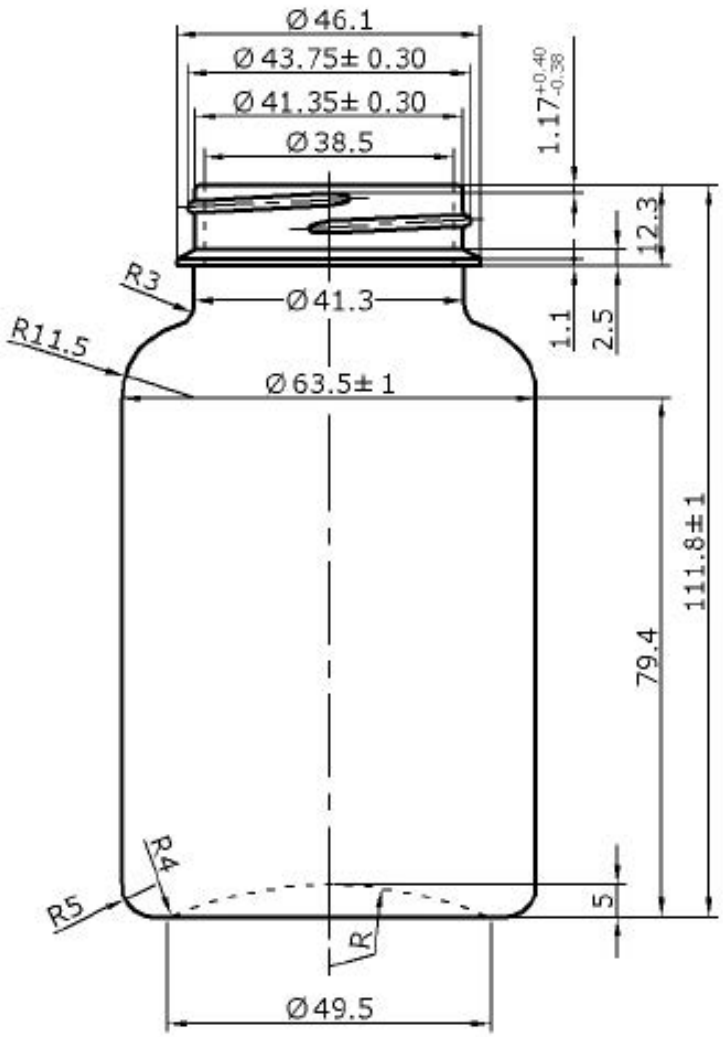

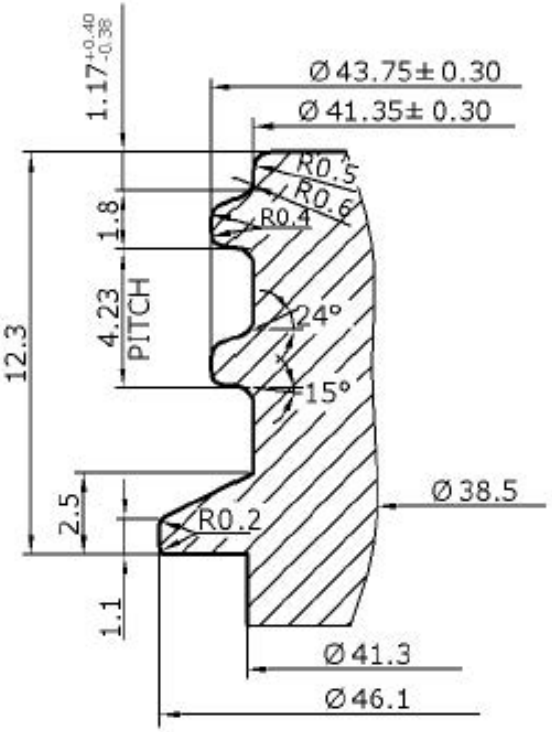

FINISH DETAIL
S/5:1

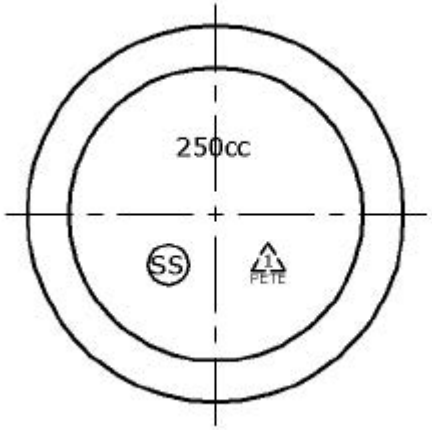

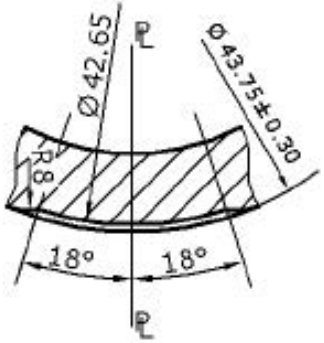

Thread's Detail on
Parting Line
(S=3:1)

DISCLAIMER

THIS INFORMATION IS PROVIDED AS A GENERAL GUIDE, INCLUDING DIMENSIONS. IT IS THE CUSTOMER'S RESPONSIBILITIES TO SELECT THE PROPER CONTAINER FOR PRODUCT AND APPLICATION COMPATIBILITY.

DISTRIBUTED BY: Pipeline Packaging

REF NO.: DWG20174

DESCRIPTION: 250 cc PET Packer, 45-400