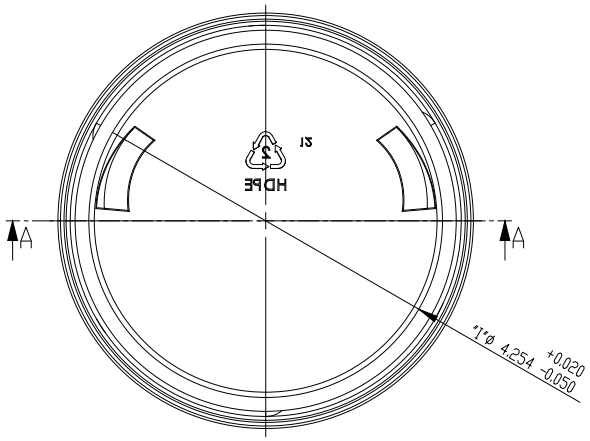

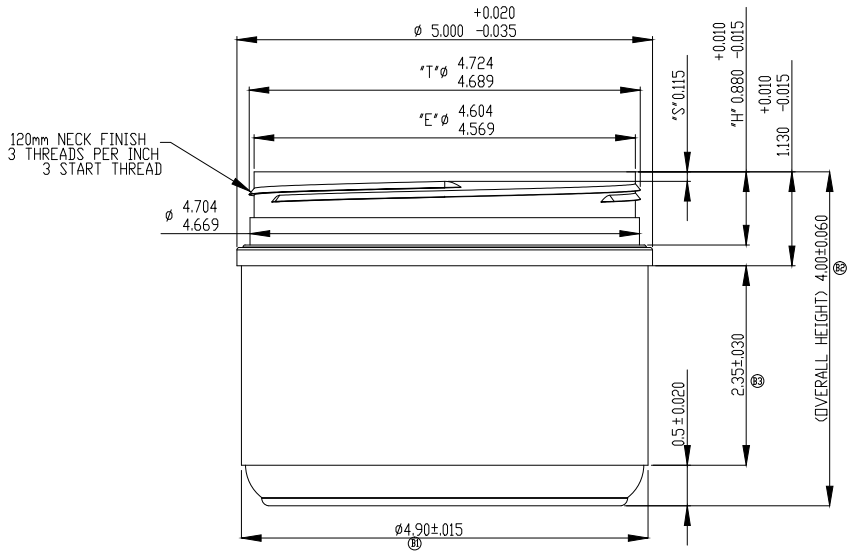

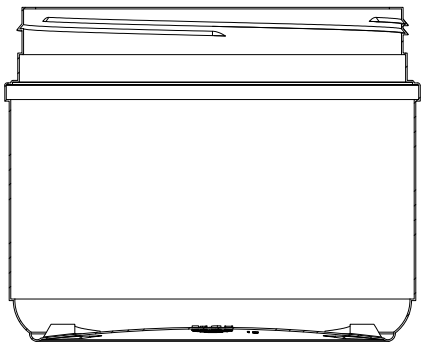

SECTION A-A

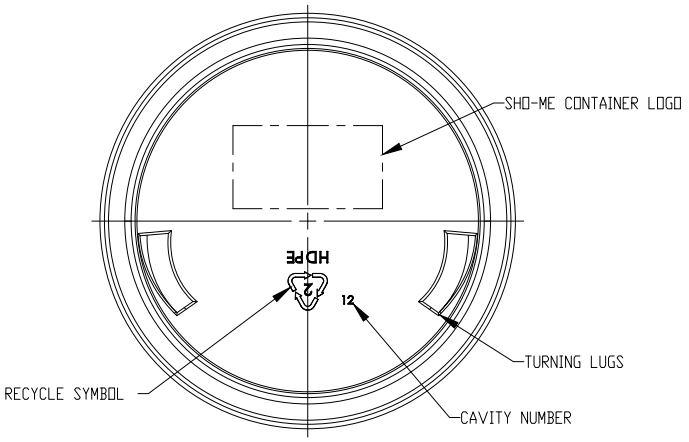

NOTE:

- WEIGHT : 55gr +/- 5gr
- CAPACITY: 36oz
- OVERFLOW CAPACITY: 37.15oz
- 0.015 MIN WALL THICKNESS

DISCLAIMER

THIS INFORMATION IS PROVIDED AS A GENERAL GUIDE, INCLUDING DIMENSIONS. IT IS THE CUSTOMER'S RESPONSIBILITIES TO SELECT THE PROPER CONTAINER FOR PRODUCT AND APPLICATION COMPATIBILITY.

DISTRIBUTED BY:	REF NO.:
Pipeline Packaging	DWG30953
DESCRIPTION: 36 oz White HDPE Canister, 120 mm, Triple Thread	