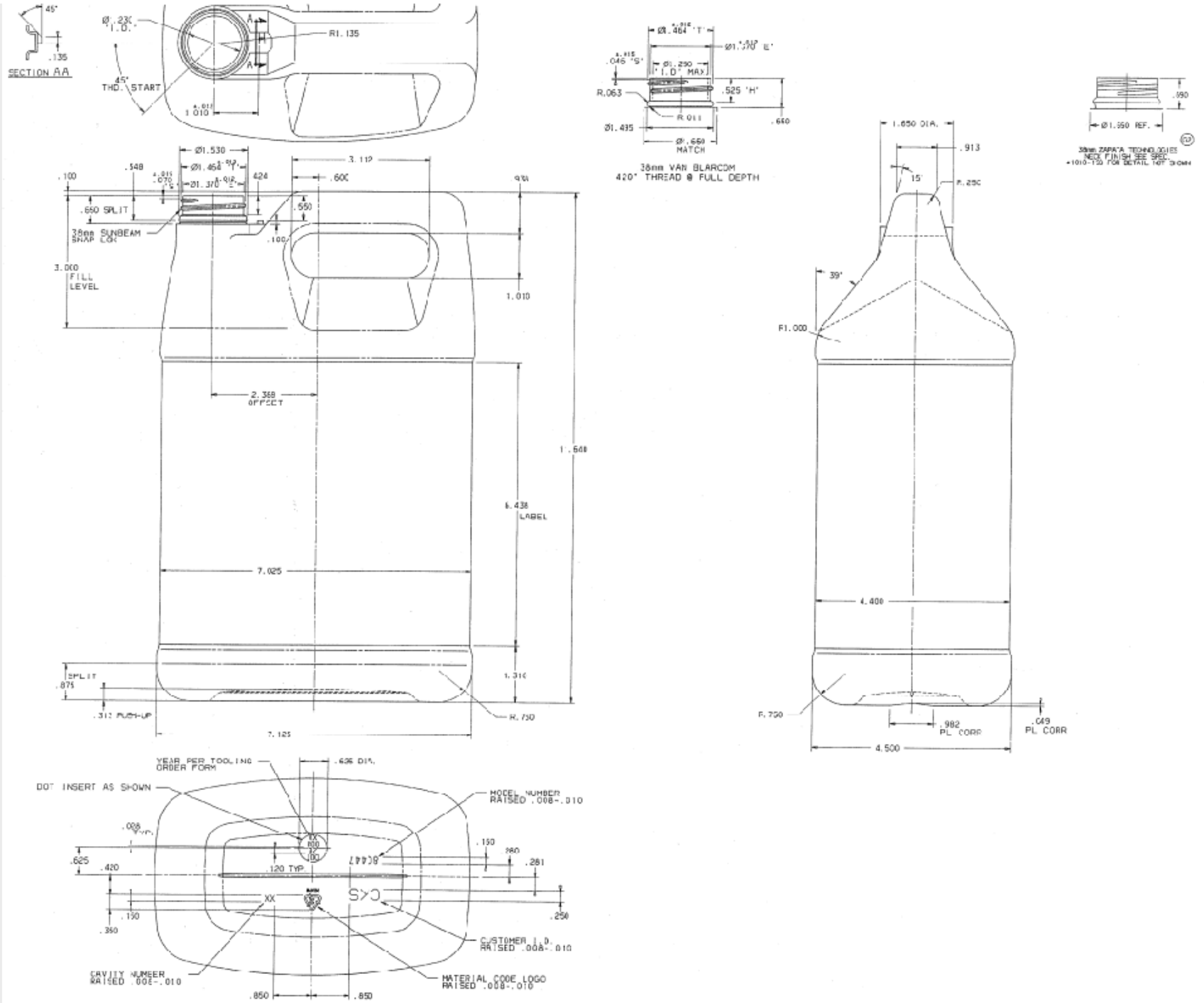

DISCLAIMER THIS INFORMATION IS PROVIDED AS A GENERAL GUIDE, INCLUDING DIMENSIONS. IT IS THE CUSTOMER'S RESPONSIBILITIES TO SELECT THE PROPER CONTAINER FOR PRODUCT AND APPLICATION COMPATIBILITY.	DISTRIBUTED BY: Pipeline Packaging	REF NO.: DWG30392
	DESCRIPTION: DescriptionDescriptionDescription	