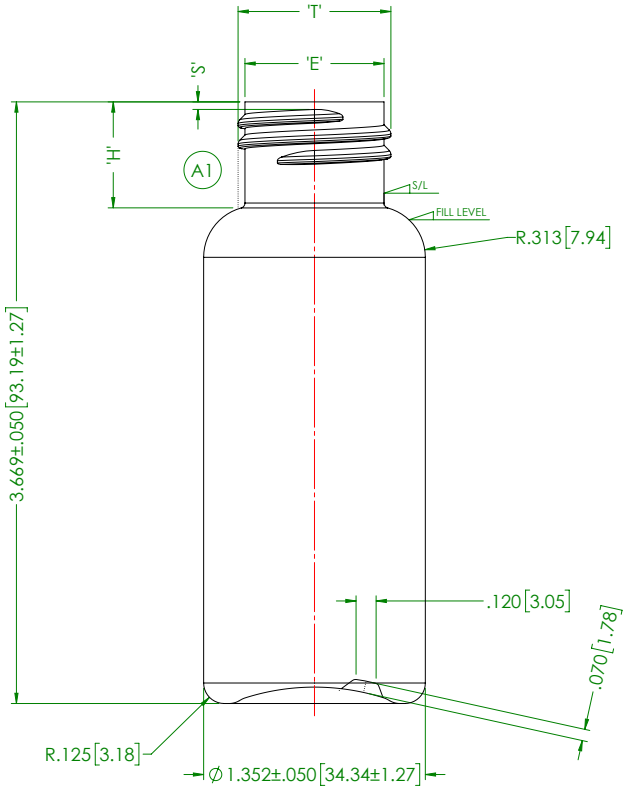

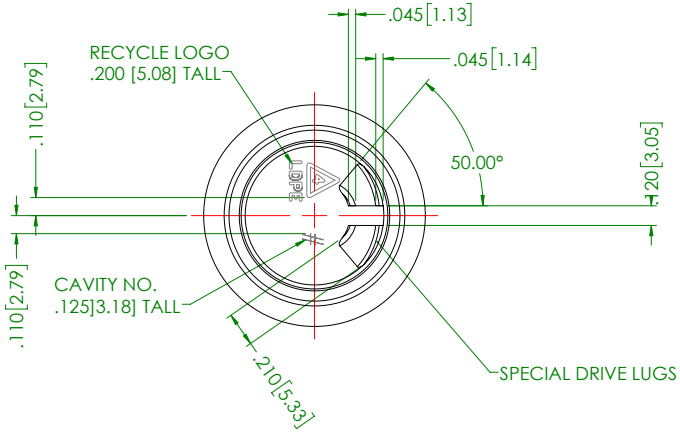

NECK FINISH:	M24-SP410 SPECIAL			GRAM WT.	9g±1.5
'T'	'E'	'H'	'S'	'L'	'W'
.932±.008	.848±.008	.646±.015	.046±.015	———	———
23.67±0.20	21.54±0.20	16.41±0.38	1.17±0.38	———	———
HELIX ∢:	2° 34'	T.P.I.:	8	CUTT. DIA.:	0.375
CAPACITY TO FILL LEVEL BEFORE DECORATING					59ml±3
CAPACITY TO FILL LEVEL AFTER DECORATING					———
OVERFLOW CAPACITY BEFORE DECORATING					66ml±3.5
OVERFLOW CAPACITY AFTER DECORATING					———

DISCLAIMER

THIS INFORMATION IS PROVIDED AS A GENERAL GUIDE, INCLUDING DIMENSIONS. IT IS THE CUSTOMER'S RESPONSIBILITY TO SELECT THE PROPER CONTAINER FOR PRODUCT AND APPLICATION COMPATIBILITY.

DISTRIBUTED BY: Pipeline Packaging

REF NO.: DWG31794

DESCRIPTION:

2 oz Blue LDPE Bullet Round Bottle, 24-410